Dylan Thornburg

SANTA CLARA UNIVERSITY	ELEN 153	
Laboratory #1: Introduction to Synopsys		

I. OBJECTIVES

- To learn how to setup and use Synopsys Custom Compiler to create and simulate schematics.
- To simulate the I-V characteristics of an NMOS transistor.
- To construct and simulate a simple voltage divider network and an RC network

II. LABORATORY PROCEDURE

PART A: Synopsys Tutorial and NMOS I-V Curves

- Follow sections 1-III of the Synopsys Custom Compiler Part 1: Schematics and Simulations, in order to run Synopsys tools and to simulate the following circuits. Use the guidelines to draw the voltage divider and RC circuit rather than the transistor circuit.

ANSWERS:

Circuit:

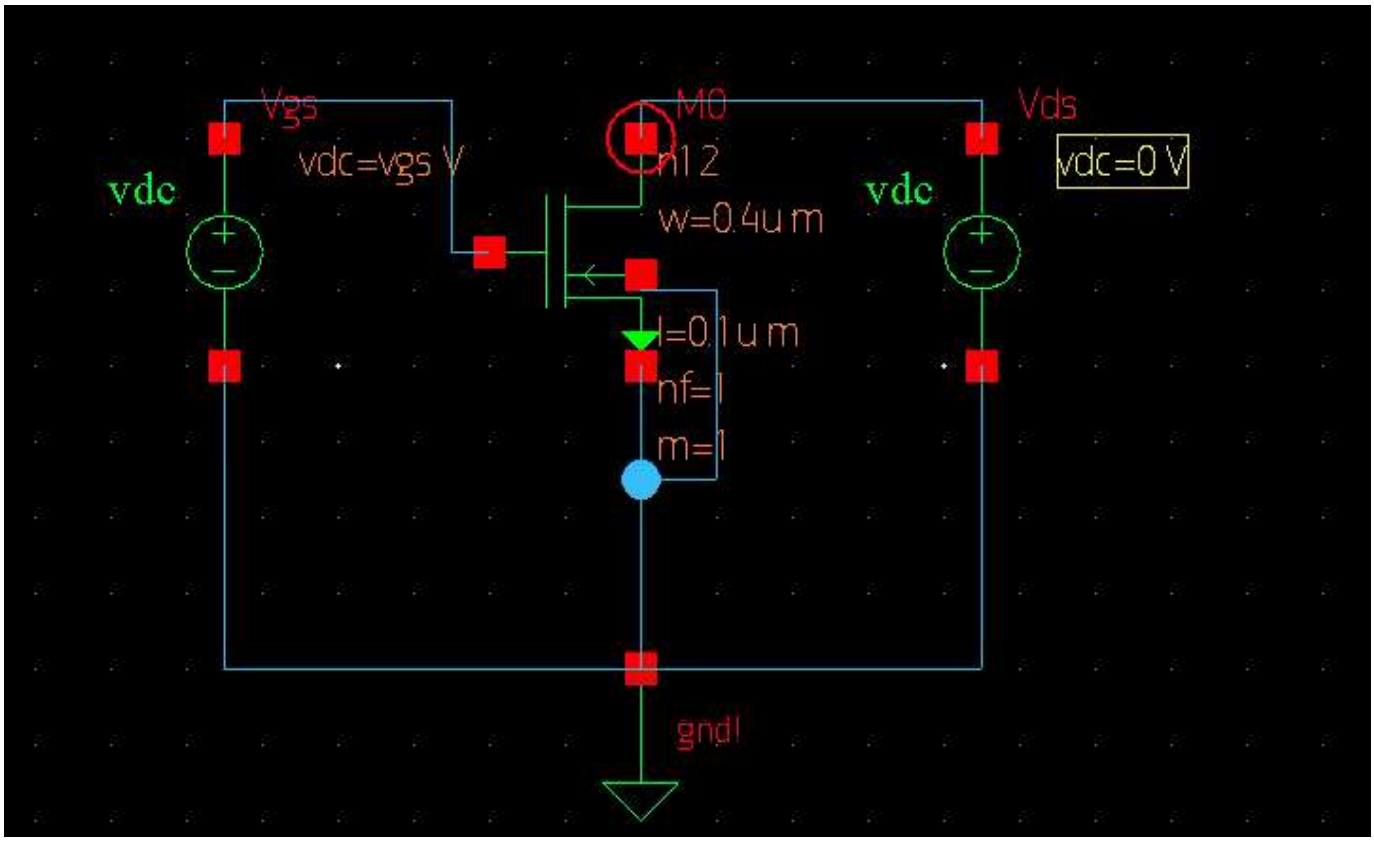

Sim setup:

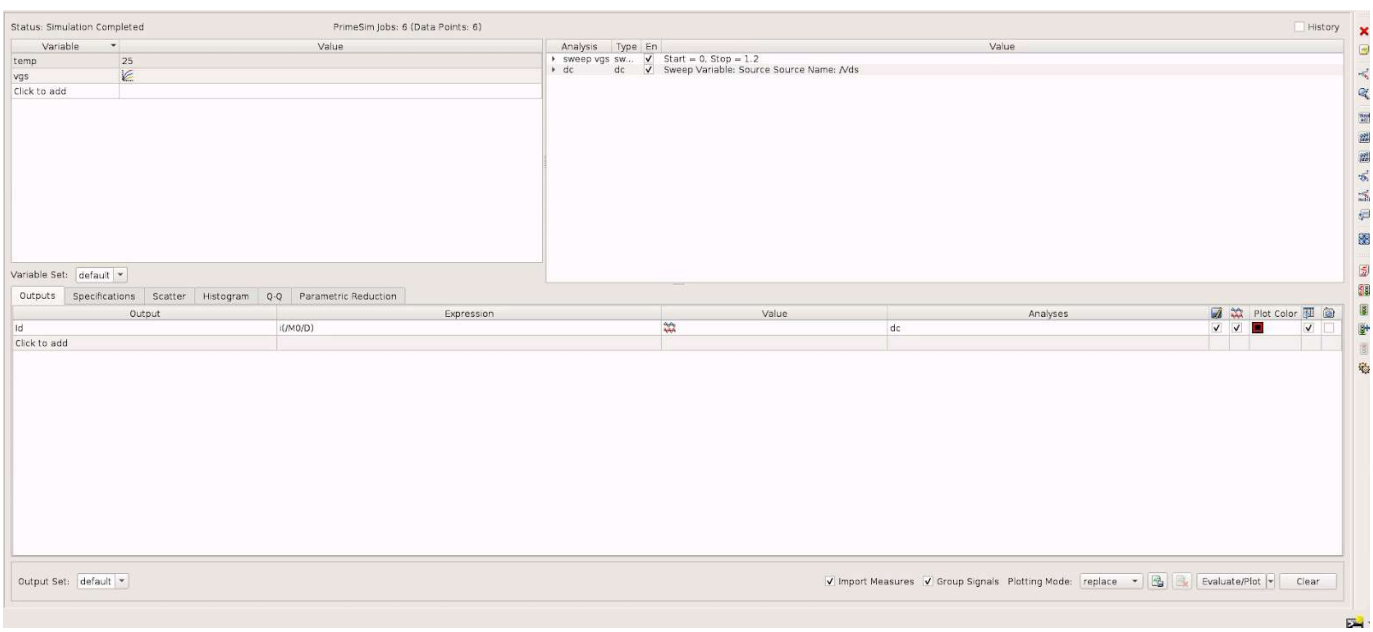

Sim results:

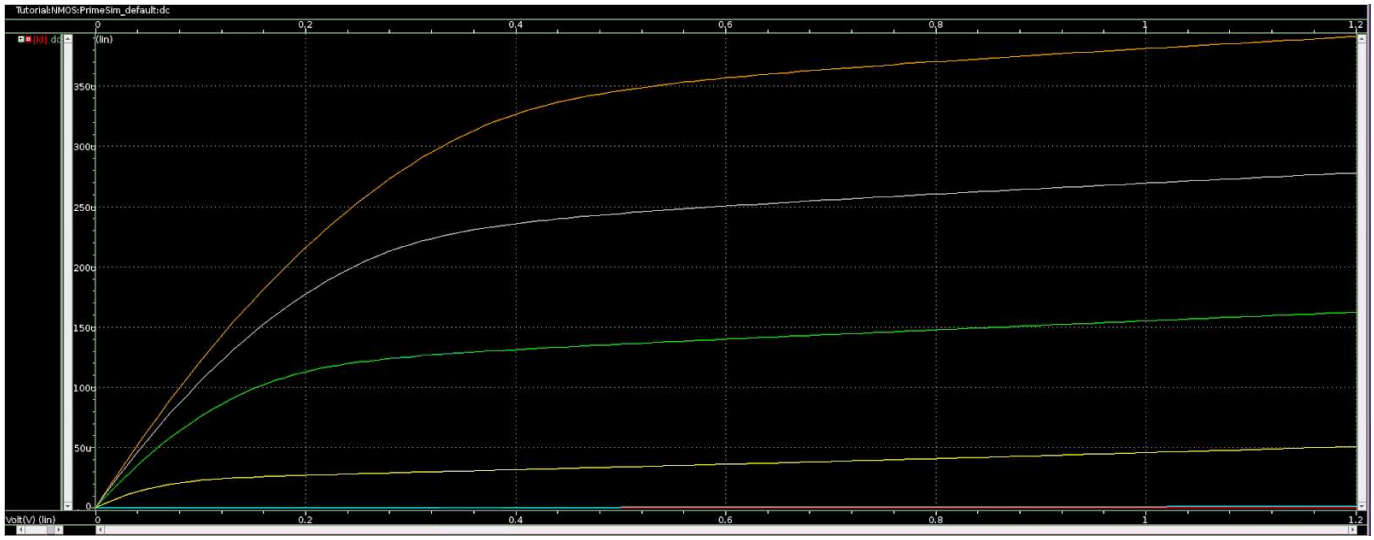

PART B: Voltage Divider

1. Schematic

- Using the same steps in the Tutorial, create a new Library. Name it Lab1.
- Create a Cell "Voltage_Divider" and create a Schematic View for it. Draw the following Voltage Divider Circuit. Make sure to give R1 the design variable value **R**, as we will vary this value in the simulation.

  Reminder: Res, Vdc and gnd! Components can be found in AnalogLib Library.

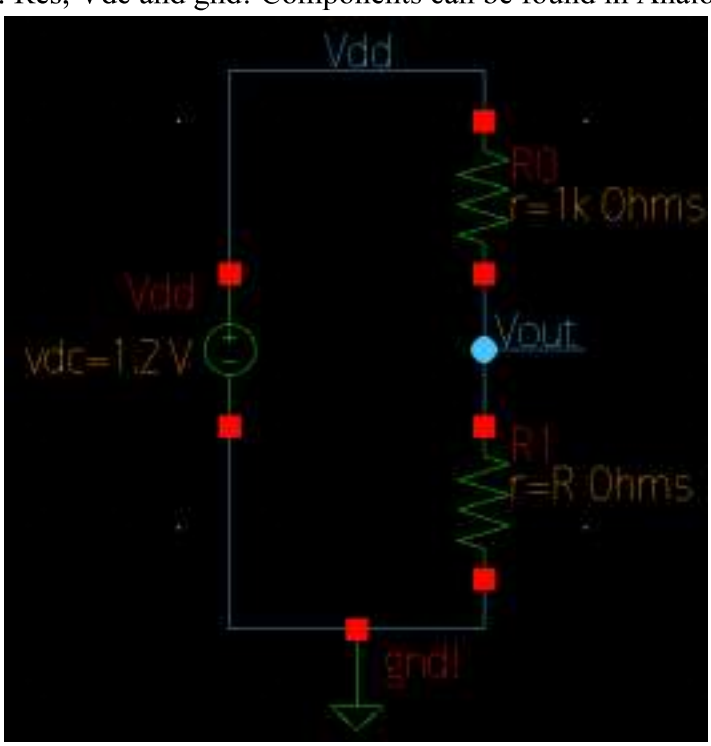

2. Simulation

Source Sweep

- Refer to the Tutorial to setup a DC simulation in SAE, and sweep the source voltage, Vdd, from 0 to 1.2V. Plot Vout.
- Define Design Variable **R**, and assign **1K** value to it. Your setup should match the figure below.

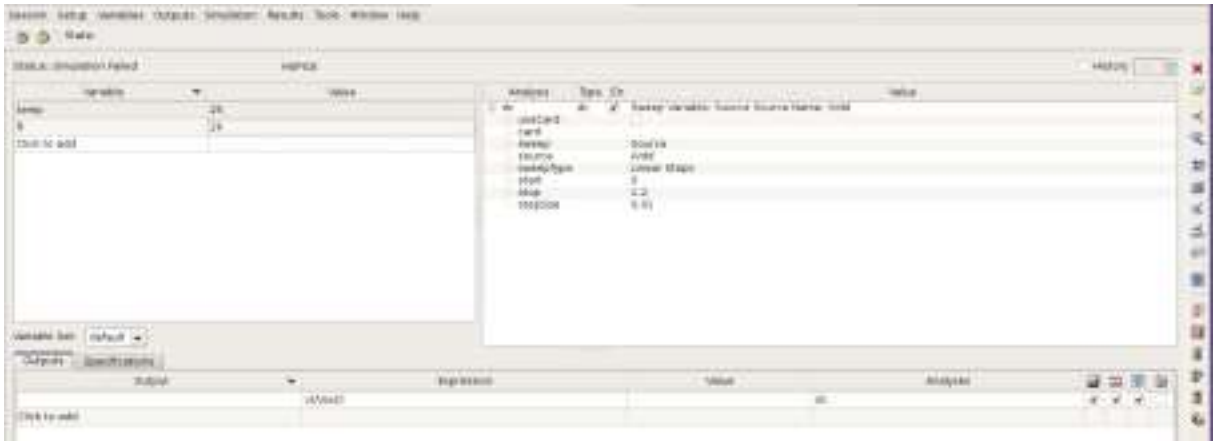

- Run the simulation and view the Vout plot.

PLOT:

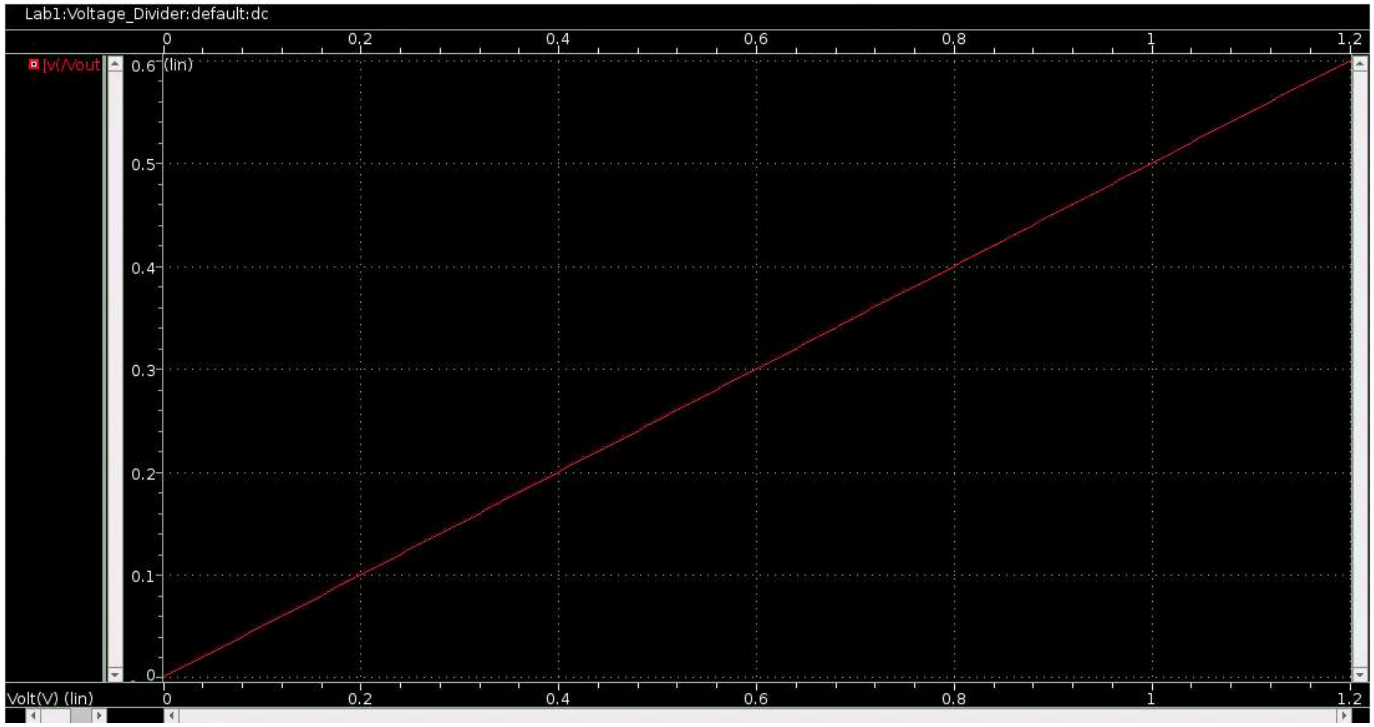

Questions:

- What is Vout when Vdd = 0.2V? 0.6V? 1.0V? 1.2V?

It is always half.
.2 -> .1
.6 -> .3
1 -> .5
1.2 -> .6

Resistance Sweep

- Adjust the DC simulation to sweep the design variable R, from 0 to 100KΩ. Your setup should match the figure below.

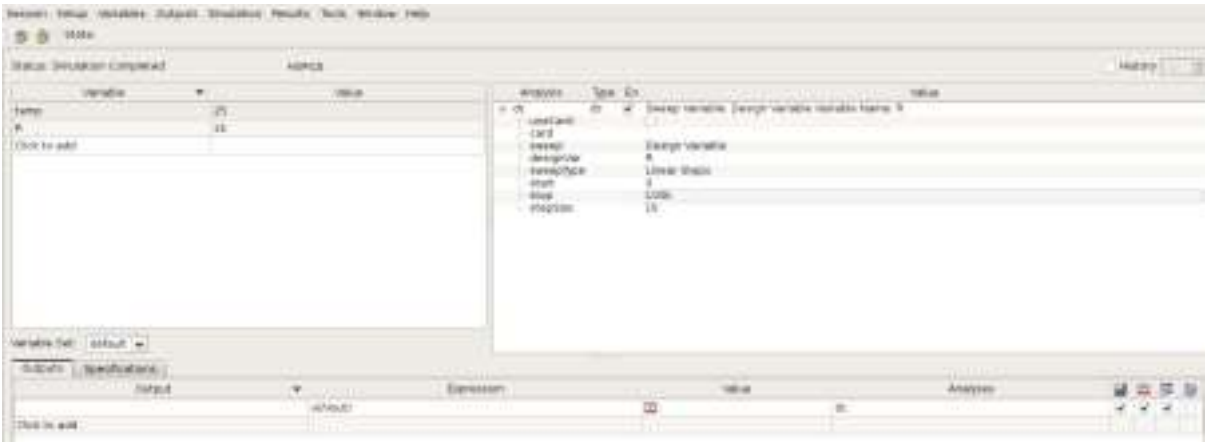

- Run the simulation and view the Vout plot.

PLOT:

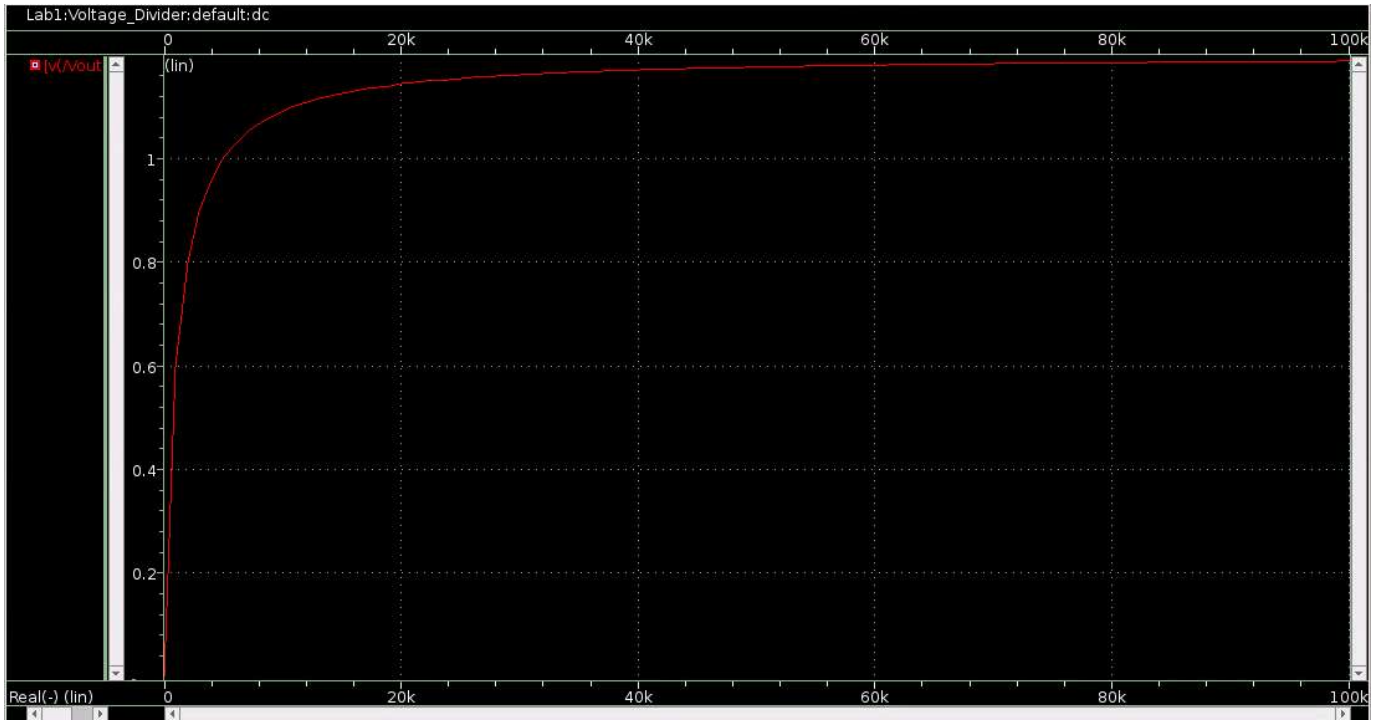

Questions:

- What is Vout when R=0Ω? What is it when R=100KΩ?

When R = 0 Ohms, Vout = 0V

When R = 100k Ohms, Vout = 1.2 * (100/101) = 1.188V which is ~ 1.2V

PART C: Simple RC Network

1. Schematic

- In the Lab1 library, create a Cell "RC Network", and create a Schematic View for it. Draw the following RC Circuit. Make sure to give R1 the design variable value **R** , and **C. Note:** For the input voltage source, use **vpulse** from the AnalogLib library. Setup the parameters as shown on the right-side parameters section in the figure below.

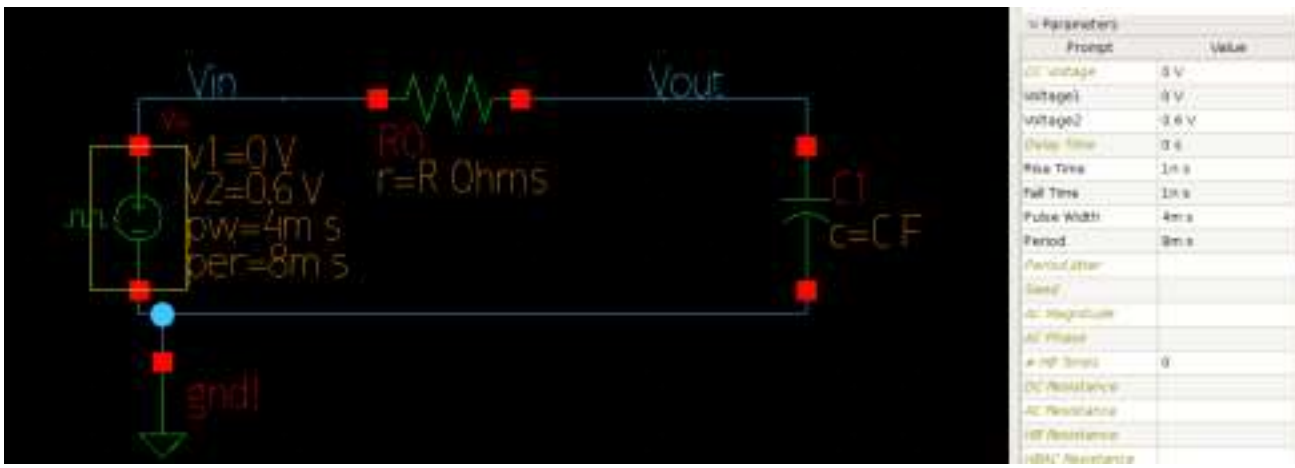

2. Simulation

Resistance

Refer to transient simulations section of the tutorial, pages 29-32 to do the following:

- Open SAE and setup a transient simulation with **time step** 1n and **stop time** 16m.
- Define design variable **C** as 1uF and **R** as 1kΩ.
- Setup a Parametric Analysis for design variable R, and assign values 100, 1k and 10kΩ as shown below.

- Your setup should match the figure below

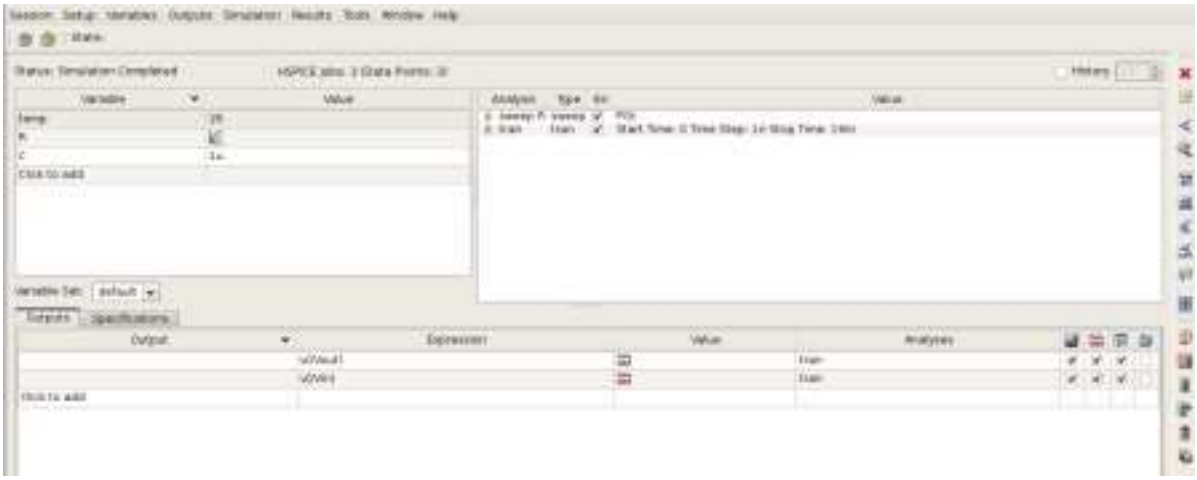

- Run the simulation and view Vin and Vout waveforms.

PLOTS:

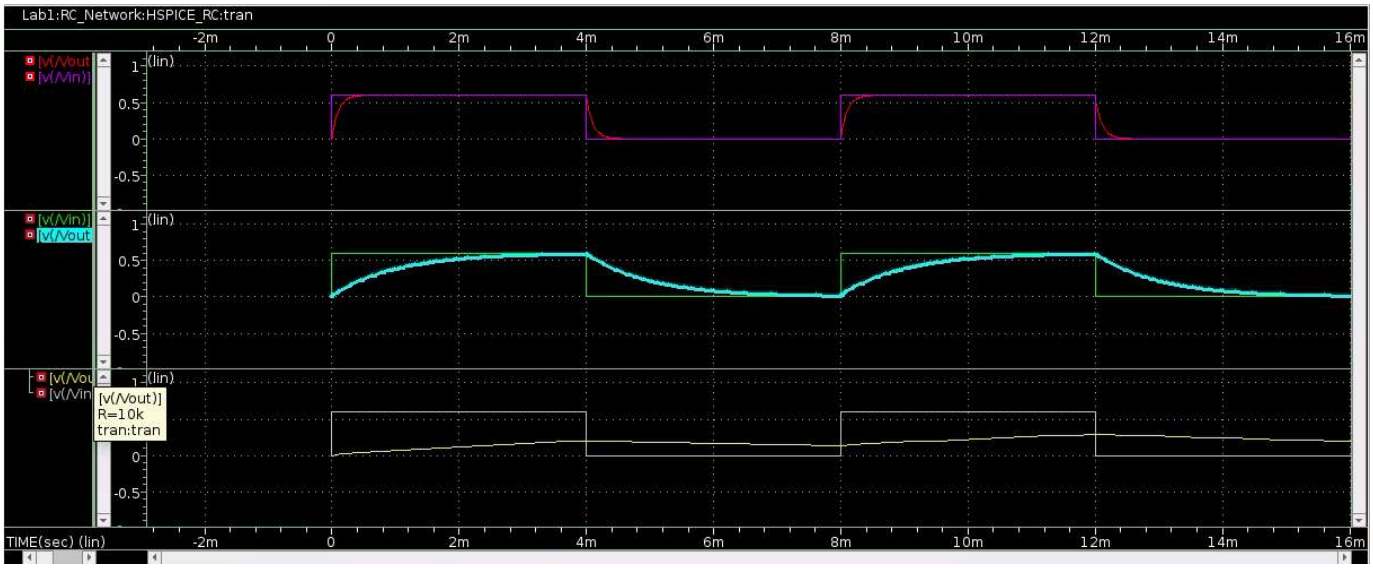

- Use the measurement tool in WaveView to measure the rise and fall time of each case as shown below. Select appropriate signal and appropriate trigger. Include these measurements in your report.

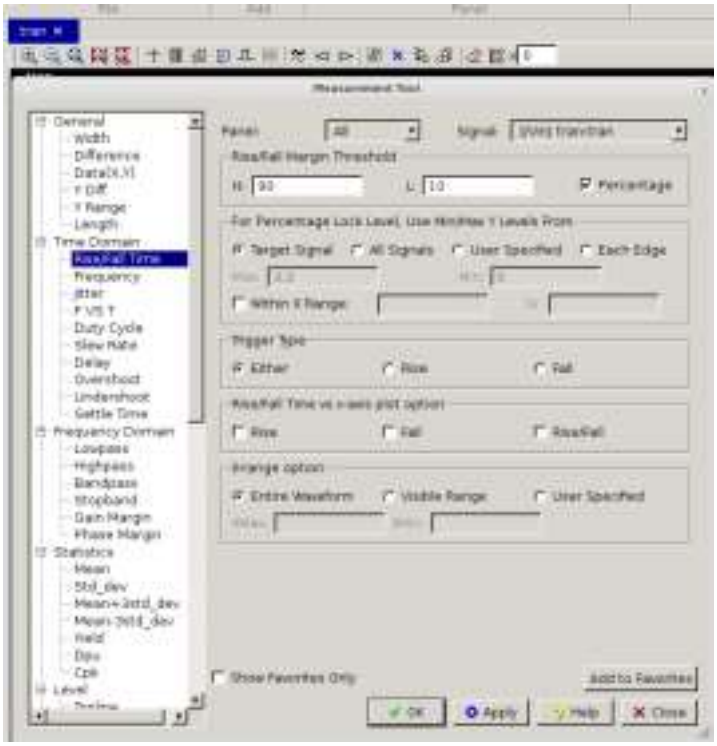

Questions:

- What is the definition for Rise and Fall time of a wave?

The rise and fall time represent the time it takes for the capacitor to charge and discharge respectively.

NUMBERS:

100 Ohm: Rise = 220us. Fall = 220us

1k Ohm: Rise = 2.05ms. Fall = 2.2ms

10k Ohm: Rise = 10.6ms. Fall = N/A

- In the last case, where R is 10k, the tool fails to show the correct value for Rise/Fall time. Explain briefly what goes wrong and why this happens?

The rise time adds the two rises, while fall is just N/A. This happens because the cap never fully charges, nor does it ever fully discharge (I think).

Capacitance

- Repeat the above steps, but adjust the parametric analysis to assign design variable C to 0.01u, 0.1u and 1uF. Make sure Parametric Analysis for R is turned off and R is fixed at 1kΩ. Your

Parametric analysis and simulation setup should match the figures below.

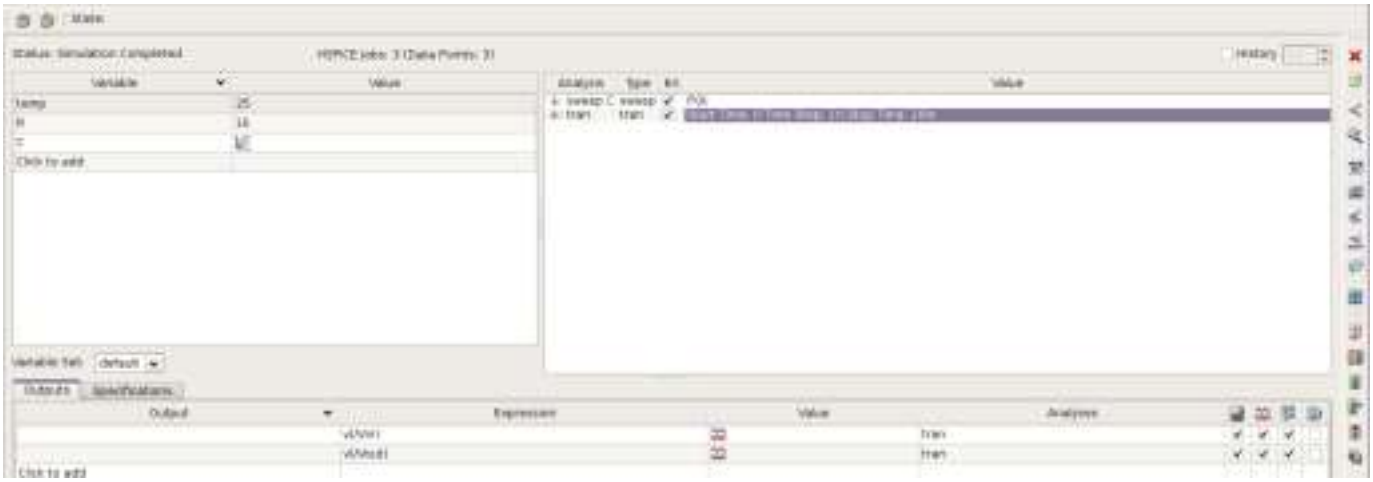

- Run the Simulation and view Vin and Vout waveforms.

PLOTS:

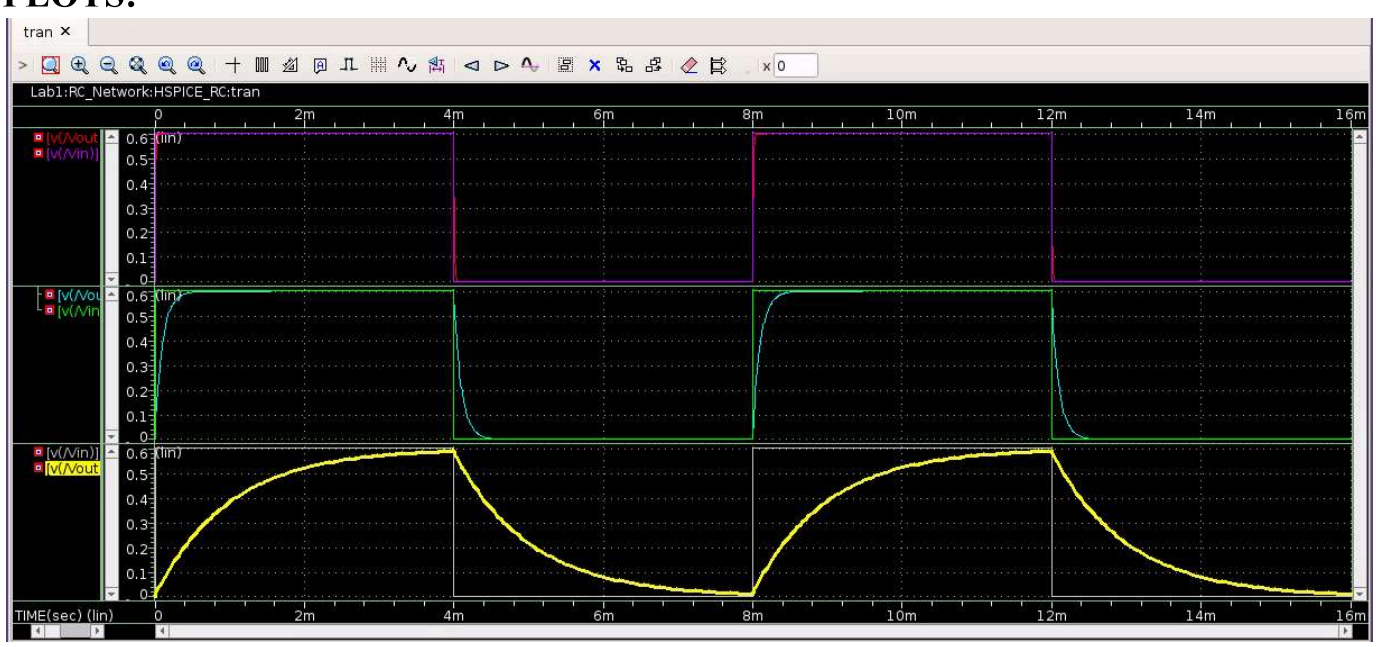

- Use the measurement tool to measure rise and fall times in each case. Remember to include these measurements in your report

10nF: Rise = 22us. Fall = 22us

100nF: Rise = 220us. Fall = 220us

1uF: Rise = 2.05ms. Fall = 2.2ms

V. REPORT

Write a short laboratory report that details all the work done. Describe the objective and procedures of this lab with your own words. The lab report should contain the following:

a) All schematics used in your lab.
b) Screenshots of all Simulation setups in SAE
c) All Simulation Results, including waveforms and any required values/measurements.
d) Answer any questions in the lab assignment
e) Conclusions

Objectives in my own words:

Learn how to use and become familiar with Synopsys Custom compiler to build and simulate circuits. We will do this with an NMOS circuit, RC circuit, and Voltage Divider Circuit.

Conclusions:

There are no real analytical conclusions. The lab consisted of following tutorials and examining known Mosfet, RC circuit, and voltage divider behavior. Synopsys custom compiler overall is a very useful tool for circuit simulation, but can be tricky.